# SY8036
# High Efficiency 5.5V, 6A, 1 MHz Synchronous Step Down Regulator

## General Description

SY8036 is a high-efficiency 1 MHz synchronous step-down DC-DC regulator IC capable of delivering up to 6A output current. SY8036 operates over a wide input voltage range from 2.7V to 5.5V and integrates the main switch and the synchronous switch with very low $R_{DS(ON)}$ to minimize the conduction losses.

Low output voltage ripple and small external inductor and capacitor sizes are achieved with 1MHz switching frequency.

## Ordering Information

SY8036□(□□)□

- Temperature Code
- Package Code
- Optional Spec Code

| Ordering Number | Package Type | Note |
|---|---|---|
| SY8036DBC | DFN3×3-10 | 6A |

## Features

- Low $R_{DS(ON)}$ for internal switches (top/bottom): 40/30mΩ
- Input voltage range: 2.7-5.5V
- 1 MHz switching frequency minimizes the external components
- External adjustable softstart limits the inrush current
- 100% dropout operation
- Power good indicator
- RoHS Compliant and Halogen Free
- Compact package: DFN3x3-10

## Applications

- LCD TV
- Access Point Router
- Notebook PC
- Server

## Typical Applications

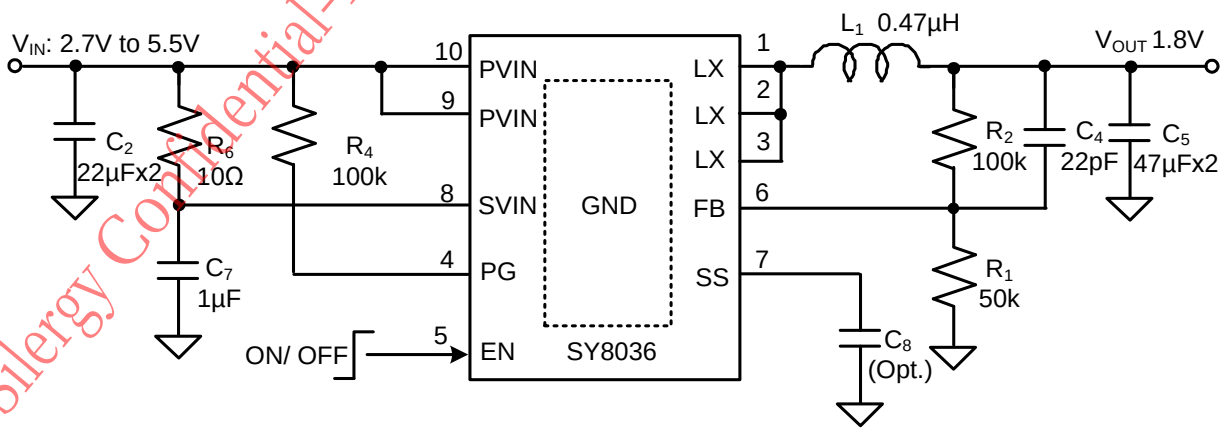


**Figure 1: Typical application circuit diagram ( $V_{OUT}$=1.8V)**

Silergy Confidential-for 半导小芯


© 2018 Silergy Corp. All Rights Reserved.

## Pinout (top view)

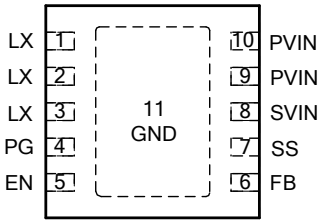


**Top Mark: CS*xyz* (**device code: CS, ***x=year code, y=week code, z= lot number code)***

| Pin Name | Pin Number | Pin Description |
|---|---|---|
| EN | 5 | Enable control. Pull high to turn on. Integrated 1M pull-down resistor. |
| GND | 11 | Ground pin. |
| LX | 1,2,3 | Phase node pin. Connect this pin to the inductor. |
| SVIN | 8 | Signal power input pin. Decouple this pin to GND pin with at least 1μF ceramic cap. |
| PVIN | 9,10 | Power input pin. Decouple this pin to GND pin with at least 22μF ceramic cap. |
| FB | 6 | Output feedback pin. Connect this pin to the center point of the output resistor divider (as shown in Figure 1) to program the output voltage: $V_{OUT}=0.6\times(1+R_1/R_2)$. |
| PG | 4 | Power good indicator(Open drain output). Low if the output < 90% of regulation voltage; High otherwise. Connect a pull-up resistor to the input. |
| SS | 7 | Softstart programming pin. Connect a capacitor from this pin to ground to program the softstart time. Tss=Max(600us, Css×0.6V/10uA). |

## Absolute Maximum Ratings (Note 1)

Supply Input Voltage ---------- 0.3V to 6.5V
Enable, FB Voltage---------- 0.3V to $V_{IN}$ + 0.6V
Power Dissipation, $P_D$ @ $T_A$ = 25 ℃ DFN3X3-10 ---------- 2.6W
Package Thermal Resistance (Note 2)
$\theta_{JA}$ ---------- 38 ℃/W
$\theta_{JC}$ ---------- 8 ℃/W
Junction Temperature Range ---------- -40 ℃ to 150 ℃
Lead Temperature (Soldering, 10 sec.) ---------- 260 ℃
Storage Temperature Range ---------- -65 ℃ to 150 ℃
ESD Susceptibility (Note 2)
HBM (Human Body Mode) ---------- 2kV
MM (Machine Mode) ---------- 200V
Dynamic LX voltage in 50ns duration ---------- IN+3V to GND-4V

## Recommended Operating Conditions (Note 3)

Supply Input Voltage ---------- 2.7V to 5.5V
Junction Temperature Range ---------- -40 ℃ to 125 ℃
Ambient Temperature Range ---------- -40 ℃ to 85 ℃

Silergy Confidential-For半导小芯


© 2018 Silergy Corp. All Rights Reserved.

# Electrical Characteristics

($V_{IN}$ = 5V, $V_{OUT}$ = 2.5V, L = 0.47μH, $C_{OUT}$ = 47μFx2, $T_A$ = 25℃, $I_{OUT}$ = 1A unless otherwise specified)

| Parameter | Symbol | Test Conditions | Min | Typ | Max | Unit |
|---|---|---|---|---|---|---|
| Input Voltage Range | $V_{IN}$ | | 2.7 | | 5.5 | V |
| Shutdown Current | $I_{SHDN}$ | EN=0 | | 0.1 | 1 | μA |
| Quiescent Current | $I_Q$ | $I_{OUT}$=0, $V_{FB}$=$V_{REF}$ · 105% | | 150 | | μA |
| Feedback Reference Voltage | $V_{REF}$ | | 0.591 | 0.6 | 0.609 | V |
| FB Input Current | $I_{FB}$ | $V_{FB}$=$V_{IN}$ | -50 | | 50 | nA |
| PFET $R_{ON}$ | $R_{DS(ON)-P}$ | | | 40 | | mΩ |
| NFET $R_{ON}$ | $R_{DS(ON)-N}$ | | | 30 | | mΩ |
| PFET Current Limit | $I_{LIM}$ | | 7.5 | | | A |
| EN Rising Threshold | $V_{ENH}$ | | 1.5 | | | V |
| EN Falling Threshold | $V_{ENL}$ | | | | 0.4 | V |
| Input UVLO Threshold | $V_{UVLO}$ | | | | 2.7 | V |
| UVLO Hysteresis | $V_{HYS}$ | | | 0.2 | | V |
| Oscillator Frequency | $F_{OSC}$ | $I_{OUT}$=1A | | 1 | | MHz |
| Min ON Time | | | | 80 | | ns |
| Max Duty Cycle | | | 100 | | | % |
| Thermal Shutdown Temperature | $T_{SD}$ | Shutdown temperature | | 150 | | ℃ |
| | | Hysteresis | | 10 | | |
| Soft Start Time | $t_{SS}$ | $C_{SS}$=100nF | | 6 | | ms |
| | | Without $C_{SS}$ | | 0.6 | | |
| Phase Node Discharge Resistance | $R_{DISCHG}$ | | | 40 | | Ω |

Silergy Confidential-For 华昌达

**Note 1**: Stresses beyond the "Absolute Maximum Ratings" may cause permanent damage to the device. These are stress ratings only. Functional operation of the device at these or any other conditions beyond those indicated in the operational sections of the specification is not implied. Exposure to absolute maximum rating conditions for extended periods may affect device reliability.

**Note 2**: $\Theta_{JA}$ is measured in the natural convection at $T_A$ = 25 ℃ on a low effective single layer thermal conductivity test board of JEDEC 51-3 thermal measurement standard. Test condition: Device mounted on 2" x 2" FR-4 substrate PCB, 2oz copper, with minimum recommended pad on top layer and thermal vias to bottom layer ground plane.

**Note 3:** The device is not guaranteed to function outside its operating conditions.


© 2018 Silergy Corp. All Rights Reserved.

# DFN3x3-10 Package outline

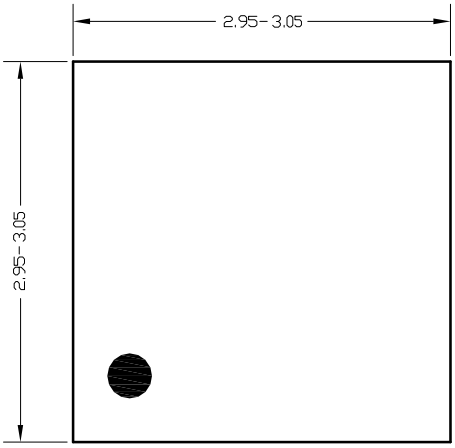


Top View

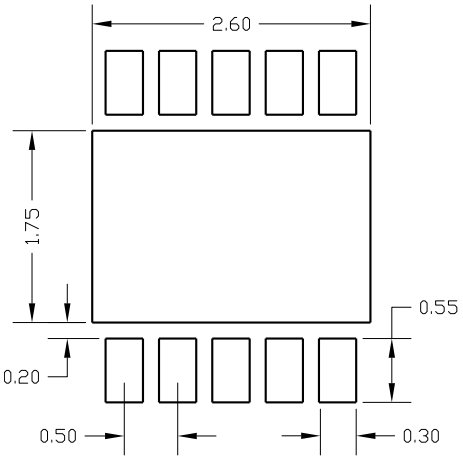


PCB layout (recommended)

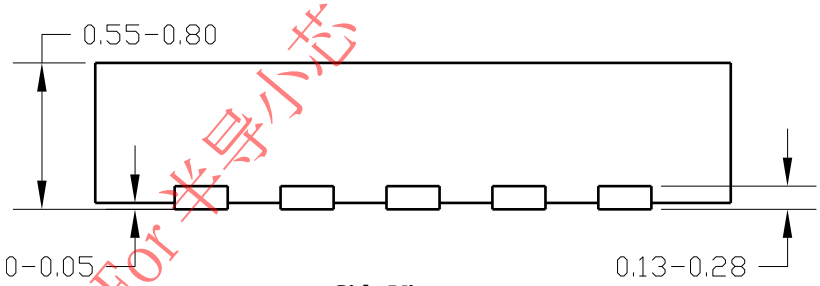


Side View

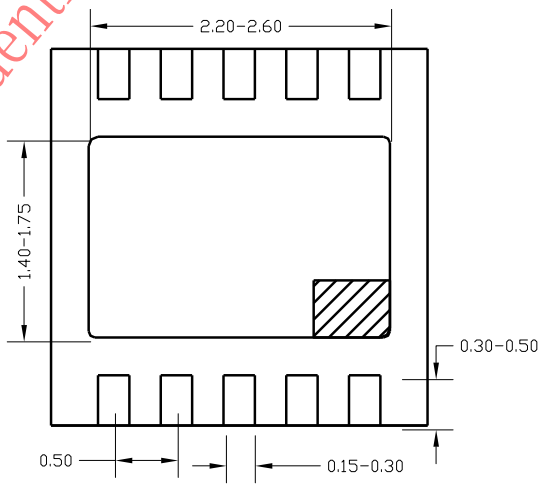


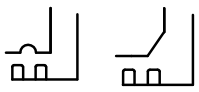

Detail A
Pin1 identifier: two options

Bottom View

**Notes: All dimensions are in millimeters and exclude mold flash & metal burr.**

Silergy Confidential-For 半导小芯


© 2018 Silergy Corp. All Rights Reserved.

# Taping & Reel Specification

## 1. DFN3x3-10 taping orientation

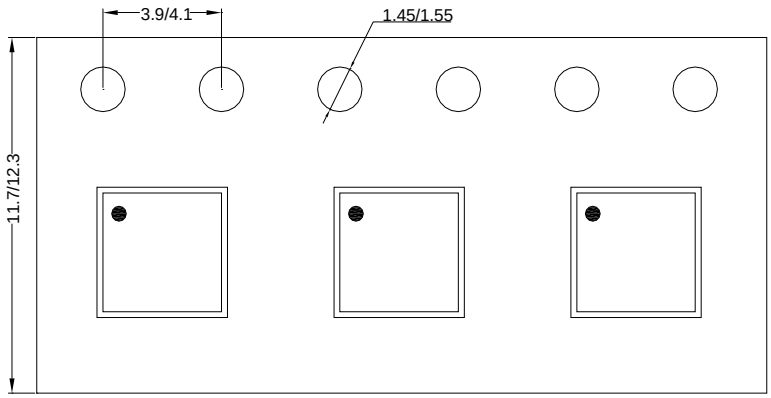


**Feeding direction** →

## 2. Carrier Tape & Reel specification for packages

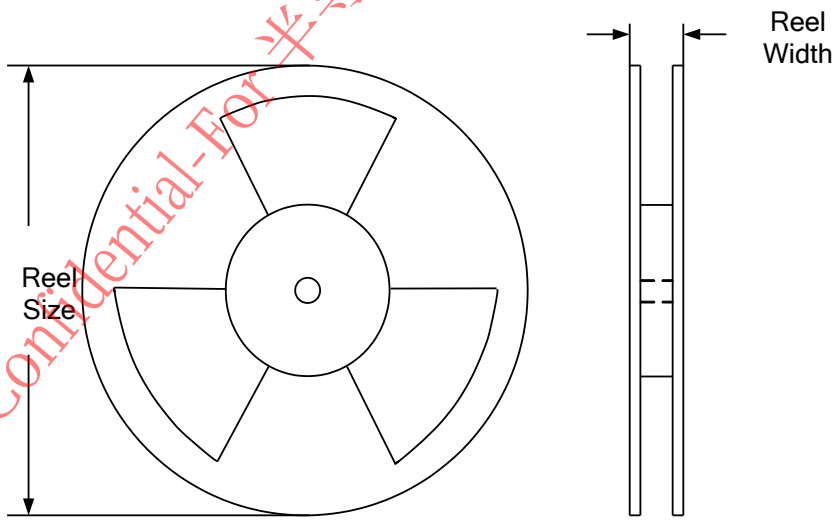


Silergy Confidential-For 半导芯芯

| Package types | Tape width (mm) | Pocket pitch(mm) | Reel size (Inch) | Reel width(mm) | Trailer length(mm) | Leader length (mm) | Qty per reel |
|---|---|---|---|---|---|---|---|
| DFN3x3 | 10 | 8 | 13" | 12.4 | 400 | 400 | 5000 |

## 3. Others: NA


© 2018 Silergy Corp. All Rights Reserved.