CND-tek
磁联达

B1626PS

EN

10/100M Single Port Transformer Module

1. Compatible with various 10/100 Base-TX transceiver requiring 1:1 transmit and receive turns ratio
2. Compliant with IEEE 802.3 standard including baseline wander compensation specification of 350μH OCL when Biased at 8mA
3. Low profile Surface Mount Packaging designed for Hi-Temp Reflow Process
4. Single channel interface for 10/100Mbps Ethernet applications with CMC's tuned to Enhance EMC system performance
5. Operating Temperature range: 0℃ TO +70℃
6. Storage temperature range: -25℃ TO +125℃

DIMENSIONS & SCHEMATICS

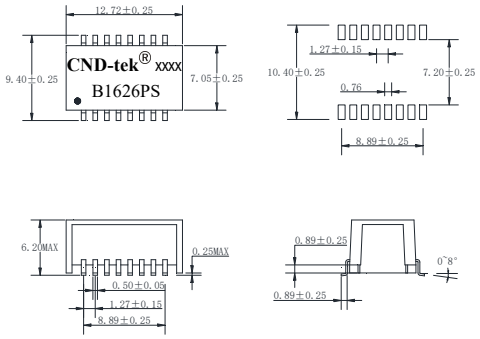

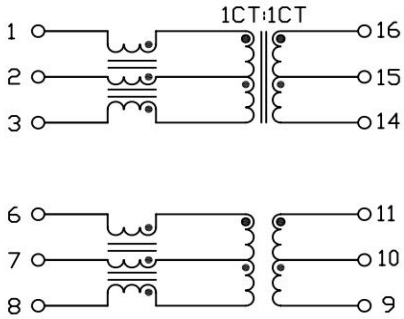

Note: 1、Dimension: mm, 2.Unless otherwise specified,tolerances are: ±0.15mm

TECHNICAL SPECIFICATIONS

OCL :	350 μH Min. @ 100 KHz, 100mV with 8mA DC Bias
Leakage	0.5 μH Max. @ 100KHz, 0.1V
Inductance: Cw/w:	28pF Max. @ 100KHz, 0.1V
DCR:	1.40 Ω Max.
Turns Ratio(±5%):	1CT:1CT(TX), 1CT:1CT(RX)
Polarity:	1-16, 6-11 In-Phase
Insertion Loss:	-1.0 dB Max. @ 1-100MHz
Return Loss:	-18dB Min. @30MHz -16.5 dB Min. @ 40MHz -14.5 dB Min.@ 50 MHz -12.0dB Min.@ 60-80 MHz
Cross Talk:	-40 dB Min.@ 1-60 MHz -38 dB Min.@ 60-100 MHz
Common Mode Rejection :	-30 dB Min.@ 1-100 MHz
Isolation HI-POT:	1500Vrms 1mA 2Second

PACKING SPECIFICATION

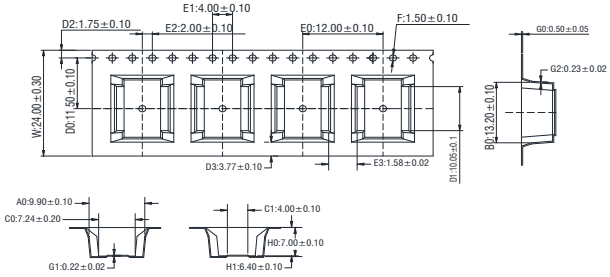

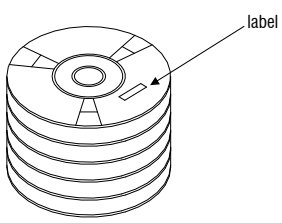

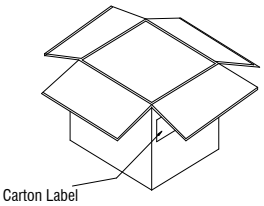

1. units/reel:650PCS
2. reel/carton:7PCS
3. units/carton :4550PCS

EXPORT CARTON:367(L)x337(W)x235(H)